NLACC

National Electronic & Industrial Material Co., Ltd

Dispensing Process Planning Services

Leave it to the leading experts, from adhesive properties to full automation implementation.
In the field of automated dispensing, equipment is merely a tool. The perfect synergy between "adhesive properties" and "process application" is the true key to determining yield rates.
With years of deep-rooted, hands-on experience in fluid control and adhesives, we thoroughly understand the physical and chemical properties of various mainstream and specialized materials on the market (such as single/two-part epoxies, silicones, UV adhesives, instant glues, and anaerobics). We provide precise solutions to overcome tough challenges like viscosity fluctuations, sedimentation/layering, and curing time control.



Custom Equipment



Equipment Planning



Product Testing



Professional Consultation



Engineering Team

• What Can We Do for You?

【Adhesive & Process Compatibility Assessment】

We perform fluid dynamics and dispensing path analyses tailored to your specified adhesives and product structures. We completely eliminate issues such as dispensing breaks, overflow, and trapped air bubbles.

【High-Precision Core Component Matching】

From micro-dispensing valves and precision volumetric valves to various types of tank reservoirs and highly sensitive pressure regulation systems, we deliver the optimal configuration based on your specific process tolerances.

【Customized Automation Process Integration】

Whether you require a standalone workstation or a fully automated production line, we provide one-stop planning—spanning mechanical hardware design, control system programming, and fluid flow control—to build the most cost-effective production line for your operations.

• Why Choose Us?

「We don't just sell equipment; we define the optimal process for you.」 Leveraging our extensive cross-industry expertise, we accelerate your R&D evaluation cycles and comprehensively boost your First Pass Yield (FPY)—whether handling highly challenging micro-dispensing, high-flow potting, or strict tolerance requirements.

• Bring your dispensing challenges to us!

We welcome you to contact our technical team with your adhesives and workpieces. We will provide you with a dedicated fluid feasibility assessment and customized process planning solutions.

Business Card

CONTENTS

Dispensing Robot LYT300S/400S/500S ----------01
Digital Peristaltic Dispenser FB100R ----------05
Digital Syringe Dispenser FB08D----------06
Dual-digital Displays Dispenser FB09D / 09HD----------06
Dispensing Valves Controller FB08F ----------07
Handheld UV Curing System FK-400HD ----------07
LED UV Irradiation Curing Device UV-LED-LYHP ----------08
UV Radiometer FD-SM008----------09
Progressive Cavity Pumps FG-SCRV ----------10
Two-component Quantitative Control System GA-VVS-AB-SET ----------11
Fluid Check Valve FG-80-CC Series ----------11
Diaphragm Valve FG-500D----------12
Double acting Suck-Back Valve FG-532----------12
Needle Valve FG-535----------12
Plunger Suck-back Valve FG-800D ----------12
Microscale Spay Valve FGS-560DV----------12
Pressure Tank----------13
Dispensing Cartridge----------13
Handheld Manual Applicator ----------14
Pneumatic Dual Cartridge Dispenser ----------14
Fittings (Syringe, Needle, Tubing, Silicone Cartridge & Static Mixer Adapters) ----------15
Dispensing Accessories / Static Mixers ----------16
Dispensing Accessories / Needles ----------17
Dispensing Accessories / Syringes ----------19
Dispensing Accessories / Teflon Tube (PTFE / PFA / FEP) ----------20

Dispensing Robot











Features a proprietary automated multi-function interface that provides comprehensive dispensing capabilities.

It features a fully visualized programming interface with an HMI touch panel. Its intuitive, image-based command editing via the touch interface significantly reduces operator training time.





With intuitive, image-based command operations, coating functions can be configured with ease. By defining just 2–3 key points, the system automatically generates complex paths, including curves, circles, and area-fill dispensing routines.



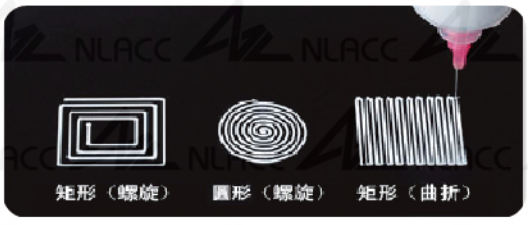

Specifications and pictures are for reference only. Please contact our sales team for more details.

LYT300S / 400S / 500S Dimensions

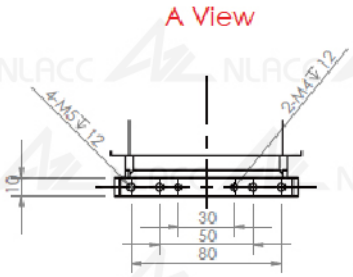

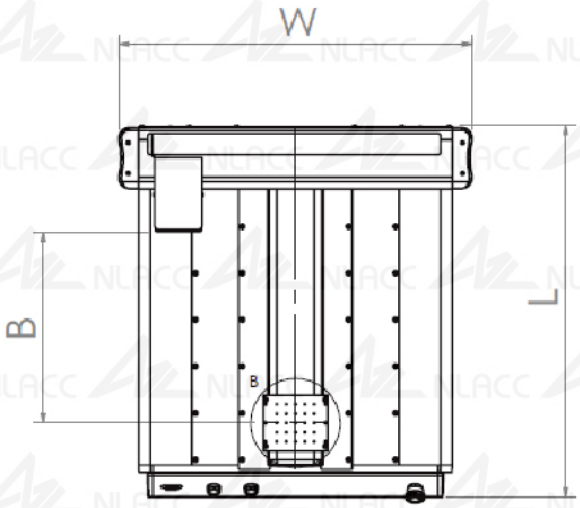

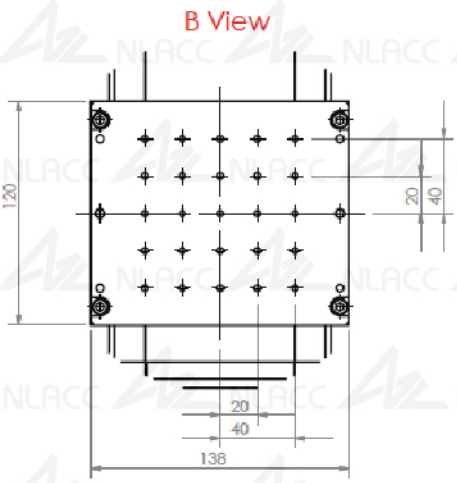

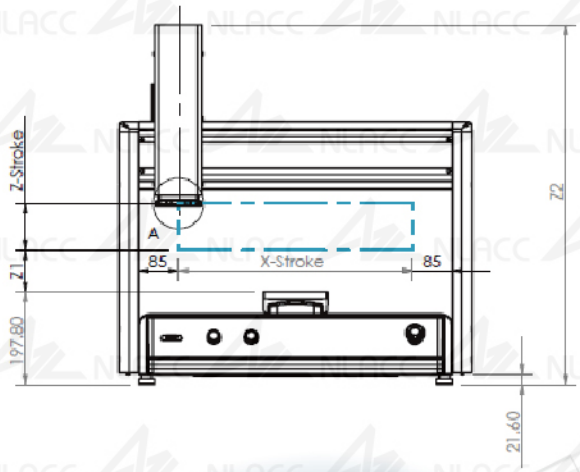

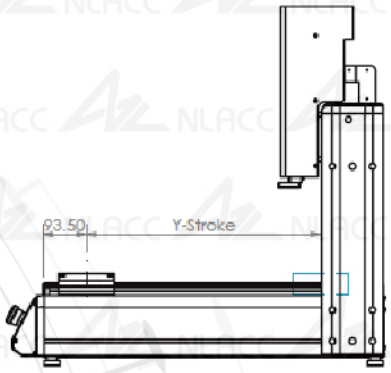

Model	LYT300S	LYT400S	LYT500S
X/Y Axis Working Range (mm)	300 × 300	400 × 400	500 × 500
L (mm)	597.3	697.3	797.3
W (mm)	554	654	754
B (mm)	209.5	309.5	409.5

Column Height Options	Standard	Extended Height		
		50	100	200
Z1	90	140	190	290
Z2	769.8	819.8	869.8	969.8



→ For more product information, please contact our local sales engineers or contact us directly.



XYZ axis are all driven by ballscrews.

Unlike belt-driven systems, the full ballscrew configuration significantly enhances overall accuracy. Advantages include: superior repeatability, extended service life, and improved transmission efficiency.



Internal Cable Carrier

The cable carrier is installed inside the structure, providing a cleaner and more streamlined appearance.



High-Rigidity Frame and Slide Design

Utilizes a one-piece extruded aluminum structure optimized through Finite Element Analysis (FEA) to achieve the best rigidity-to-weight ratio. The Y-axis features a specially engineered labyrinth-type structure that effectively prevents foreign objects from entering the mechanism.



Specifications

Model		LYT300S	LYT400S	LYT500S
Working Range	X*Y (mm)	300 × 300	400 × 400	500 × 500
	Z (mm)	100	100	100

Equipped with high-performance servo motors across the entire series

Ensuring zero step loss, high precision, and high-speed operation.

Drive Method	AC Servo Motor
Control Method	Point-to-Point (PTP) / Continuous Path (CP)
Compensation Functions	3D Linear & Circular Interpolation
Position Input Method	Teach-by-Move / Coordinate-Based Teaching
Teaching Operation Method	Handwheel with Touchscreen HMI Interface
Program Capacity	500 Programs (0-499)
External Ports	I/O：8 IN / 8 OUT
	USB (System Update, Program Storage/Backup)
Power Supply	AC 220~240V, 15A

Maximum Payload Capacity	Y (kg)	15
	Z (kg)	8
Point-to-Point Drive	X*Y (mm/s)	1000
	Z (mm/s)	500
Continuous Path Drive	X*Y*Z (mm/s)	Composite Speed 900
Position Repeatability	X*Y (mm)	±0.005
	Z (mm)	±0.005

Specifications and pictures are for reference only. Please contact our sales team for more details.

Application Examples

Dispense

Compatible with various dispensing systems to support processes such as potting, encapsulation, adhesive sealing, coating, and micro-foaming.



UV Curing

Combining dispensing equipment with UV curing provides a high-precision, high-efficiency, and eco-friendly dispensing solution.



Screw Fastening

When paired with a screw feeder and screwdriver, the system automatically performs screw feeding, fastening, inspection, and screw removal.



Visual Inspection

Equipped with a vision system and lighting, the setup enables defect and NG inspection for various small components, overcoming the limitations of manual inspection.

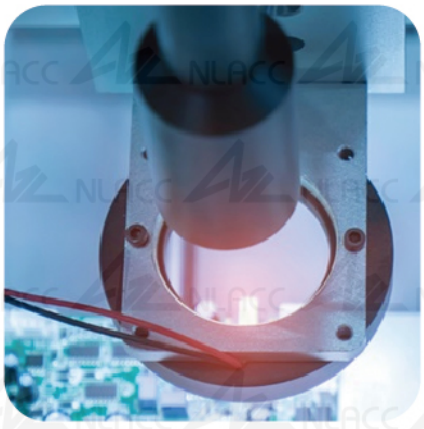

Laser Engraving

Integrated with a laser module, the system performs marking and engraving on metal or plastic workpieces to enable continuous production and increase throughput.

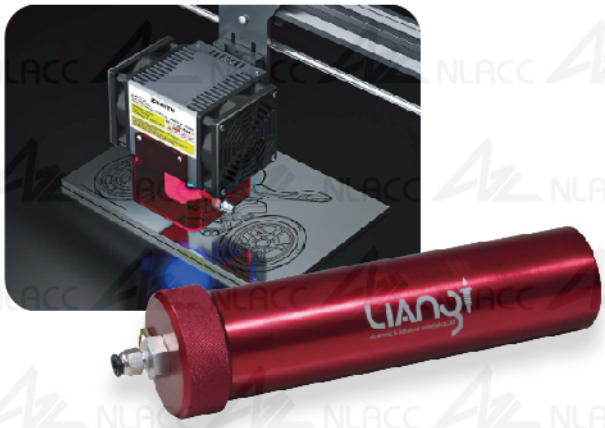

→ For more product information, please contact our local sales engineers or contact us directly.

Digital Peristaltic Dispenser
FB100R-LY

Intuitive HMI touch panel with dynamic icon-driven operation



Driven by a precision stepper motor, the FB100R-LY controls flow rate by compressing a specialized Teflon tube. This eliminates the pressure loss and clogging common in traditional pneumatic dispensers, without requiring adhesive division. Ideal for instant adhesives, solvents, medical agents, and more.



Widely used in medical, electronic, electrical, and IT product assembly. Suitable for any fluid viscosity below 5,000 cps.



Features

- Features a wear-resistant rotor to effectively extend the service life of the Teflon tube.
- Easy to operate; requires no air pressure and functions instantly upon plugging in.
- Compatible with desktop automated dispensing equipment for automated applications.
- Full voltage design, one-year functional warranty.
- Ensures bubble-free dispensing; ideal for cyanoacrylates, solvents, and anaerobic adhesives.

Specifications

Model	FB100R-LY
Size (mm)	W164 × L170 × H217 mm
Weight (kg)	4.0 kg
Input Voltage	110 VAC / 220 VAC
Switch Voltage	24 VDC / 1A
Speed	9 ml / min (PTFE) The flow speed will increase or decrease depending on the pipe diameter
Direction of Rotation	CW / CCW Forward/reverse switching
Dispense Time Range	0.01 ~ 99.99 sec.
Interface	RS232
Repetitive Positioning Accuracy	Repeatability: ± 5%



Optional: Hand switch or foot switch (Select one).

Specifications and pictures are for reference only. Please contact our sales team for more details.

Digital Syringe Dispenser FB08D



ALL LIQUID | Voltage AC100V ~ AC240V | Vacuum

Features

- Engineered to handle all types of fluids, from low to high viscosity.
- Features a highly sensitive vacuum suck-back function to effectively prevent dripping at the needle tip between cycles.
- Offers independent control over manual dispensing, automatic dispensing times, and cycle intervals.
- Equipped with a program recipe memory function to easily store and recall multiple parameter sets.
- High-resolution time control down to 0.01 seconds.
- Can be connected directly to Dispensing Robot for seamless, plug-and-play automated production.
- Full-range voltage compatibility (AC100V–AC240V) to meet international power supply standards.

Specifications

Model	FB08D
Size (mm)	W160 × L260 × H65 mm
Weight (kg)	1.5 kg
Input Voltage	110 VAC / 240 VAC
Switch Voltage	24 VDC
Air Input	0 to 150 psi (0 to 10 kg/cm²)
Air Output	0 to 150 psi (0 to 10 kg/cm²)
Dispensing Time Range	Digital setting 0.01 ~ 99.99 sec.
Interval Time Range	Digital setting 0.01 ~ 99.99 sec.
Program	40 sets of settings
Vacuum	Adjustable
Control Mode	Single-acting or Continuous

Dual-digital Displays Dispenser FB09D / 09HD



ALL LIQUID | Voltage AC100V ~ AC240V | Vacuum

Features

- Engineered to handle all types of fluids, from low to high viscosity.
- Features a highly sensitive vacuum suck-back function to effectively prevent dripping at the needle tip between cycles.
- Offers independent control over manual dispensing, automatic dispensing times, and cycle intervals.
- Equipped with a program recipe memory function to easily store and recall multiple parameter sets.
- High-resolution time control down to 0.01 seconds.
- Can be connected directly to Dispensing Robot for seamless, plug-and-play automated production.
- Full-range voltage compatibility (AC100V–AC240V) to meet international power supply standards.
- Features dual digital pressure gauges for both positive and negative pressure, allowing for precise, easy-to-read data and effortless logging.
- The FB09HD model features high-precision fine-tuning capabilities, enabling even more meticulous and ultra-precise air pressure control.

Specifications

Model	FB09D / 09HD
Size (mm)	W160 × L260 × H65 mm
Weight (kg)	1.7 kg
Input Voltage	110 VAC / 240 VAC
Switch Voltage	24 VDC
Air Input	0 to 150 psi (0 to 10 kg/cm²)
Air Output	0 to 150 psi (0 to 10 kg/cm²)
Dispensing Time Range	Digital setting 0.01 ~ 99.99 sec.
Interval Time Range	Digital setting 0.01 ~ 99.99 sec.
Program	40 sets of settings
Vacuum	Adjustable
Control Mode	Single-acting or Continuous

Dispensing Valves Controller FB08F

Voltage AC100V ~ AC240V



Specifications

Model	FB08F
Size (mm)	W160 × L260 × H70 mm
Weight (kg)	1.5 kg
Input Voltage	110 VAC / 240 VAC
Switch Voltage	24 VDC
Air Input	0 to 150 psi (0 to 10 kg/cm²)
Air Output	0 to 150 psi (0 to 10 kg/cm²)
Dispensing Time Range	Digital setting 0.01 ~ 99.99 sec.
Interval Time Range	Digital setting 0.01 ~ 99.99 sec.
Program	40 sets of settings
Vacuum	Adjustable
Control Mode	Single-acting or Continuous

Features

- Capable of driving and controlling most standard dispensing valves on the market.
- Features a built-in material pressure regulator, eliminating the need for an external air regulator to pressurize the fluid reservoir.
- Precisely controls the valve to execute manual dispensing, timed dispensing, and cyclical interval dispensing operations.
- Equipped with a standard dry contact interface for seamless integration and interlocking with external automation systems and PLCs.
- Equipped with a program recipe memory function to easily store and recall multiple parameter sets.
- High-resolution time control down to 0.01 seconds.
- Full-range voltage compatibility (AC100V–AC240V) to meet international power supply standards.

Handheld UV Curing System FK-400HD



Specifications

Model	FK-400HD
Wavelength Range	250~450 nm
Lamp Power	400W
Power Voltage	AC 100~240V 50HZ / 60HZ
Operating Temperature Range	10 ~ 40 °C
Operating humidity range	30% ~ 80%
Handheld lamp shade weight	1 kg
Main Body Weight	Approx. 7.5 kg

Features

- Universal voltage design (AC100V–AC240V).
- Equipped with a 250–400W Metal Halide UV lamp.
- Wavelength range: 250~450nm.
- Easy to operate and highly portable.
- Suitable for acrylic panels, LCD panels, glass, plastics, handicrafts, electronic parts and various UV adhesives.

Specifications and pictures are for reference only. Please contact our sales team for more details.

LED UV Irradiation Curing Device
UV-LED-LYHP

Features

- Light uniformity >85%.
- Premium global brand UV LED chips.
- Built-in cooling fan.
- Touchscreen control interface.
- Universal voltage support for global compatibility.
- Intuitive power adjustment (range: 10%–100%).
- Output timer setting: 1–999 seconds.
- Accepts external trigger signals, allowing seamless integration and control via the main system PLC.
- Multi-channel control: supports up to 4 spot curing heads with simultaneous or independent output (optional).



Major Applications

1 Electronic Industry 2 Glass Industry 3 Optical Industry
4 Pharmaceutical Industry 5 Precision Processing

Specifications

Spot Curing Head Diameter	Ø12 mm
Spot Curing Head Length	81 mm
UV Wavelength	365 nm, 385 nm, 395 nm, 405 nm
Estimated Lifespan	20,000 Hours (Not guaranteed)
Lens Weight	50g

Lens Specifications	Ø4 mm	Ø6 mm	Ø8 mm	Ø10 mm	Ø12 mm	Ø15 mm	Ø20 mm
Spot Size (mm)	4 mm	6 mm	8 mm	10 mm	12 mm	15 mm	20 mm
Peak Output Intensity (mW/cm²)	10,000	6,000	3,400	1,200	1,000	640	440

Controller Model	UV-LED-LYHP
Input Voltage	100-220V
Power Capacity	15W
Weight	1 kg
Dimensions (W × H × D)	W130 × H100 × D170 (mm)
Timer Control Setting	1~999 sec.
Output Power Adjustment	10~100%
External Control	YES (Dry Contact On/Off)



Standard Accessories:
Spot Pen Optional Lenses, Footswitch

UV Radiometer
FD-SM008

Features



- Suitable for traditional UV or LED light sources.
- Measures accumulated energy and average irradiance.
- Easy to operate; stored measurement values can be viewed directly on the device's display screen.
- Features a graphical display function for easy reading.
- Records date, time, and temperature (°C/°F).
- Stores up to 1,000 measurement values.
- Sensing intensity range from 5 mW/cm² to 40 W/cm².
- Compliant with ISO 17025 accreditation and includes a NIST-traceable calibration report/certificate.
- Selectable measurement modes (Auto / Manual / Live).
- Transfers measurement data to a PC via USB and dedicated software.
- Supports up to 20 custom Device ID tags for separate data logging and export.
- Made in USA

Specifications

Wavelength Range	250–400 nm (See Fig. 1)
Energy Measurement Range	5 mW/cm² - 40 W/cm²
Displayed Data	Average Irradiance (W/cm²) / Accumulated Energy (J/cm²)
Operating Temperature	0~75℃
Power Source	Micro USB (5V) & Rechargeable Battery (built-in)
Battery Runtime	Up to 2 hours of continuous use on a full charge
Dimensions	102 × 152 × 12.7 mm (L × W × H)

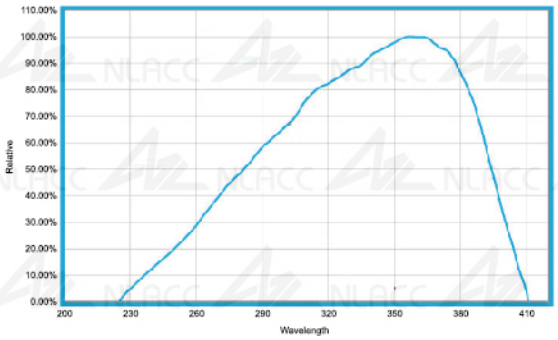

Fig. 1 UV Wavelength Range

Major applications

- UV Irradiance Monitoring & Measurement
- UV lamp intensity degradation monitoring



Screen Display Layout

Specifications and pictures are for reference only. Please contact our sales team for more details.

Progressive Cavity Pumps
FG-SCRV



Single-part Progressive Cavity Pumps



Two-part Progressive Cavity Pumps



Must be paired with a Valve Controller.

Features

- Airtight Chamber: The precise stator and rotor structure ensures a complete seal with zero leakage at 3 bar pneumatic pressure.
- Precise Control: Controlled rotor rotation provides stable fluid delivery, while the reverse function eliminates post-dispensing dripping and minimizes stringing.
- User-Friendly: High fluid compatibility, long service life, rapid installation, and easy post-use cleaning.
- High Accuracy: Consistent output with dispensing accuracy error within ±1% and repeatability >99%.
- Rotor available in Zinc Alloy with Hard Chrome Plating,Stainless Steel or Tungsten Carbide ; stator available in HNBR or Viton.

Specifications

Model	SCRV070	SCRV050L	SCRV030
Discharge Rate (ml/Revolution)	Approx. 0.76 ml	Approx. 0.2 ml	Approx. 0.0355 ml
Material Infeed Port	1/8 PT	1/8 PT	1/8 PT
Weight	1,350 g	1,000 g	575 g
Dimension H*W*D	350 × 42 × 45 mm	260 × 42 × 45 mm	233 × 28 × 33 mm

Stator Material	Properties of Applicable Fluid	Fluid Temperature
HNBR	Resistant to oil, water, wear, and high oil pressure; not resistant to polar solvents.	-10 ℃ to +40 ℃
VITON	Resistant to heat, oil, chemicals, and solvents; not resistant to ketones, esters, and nitro-containing mixtures.	-10 ℃ to +125 ℃

Two-component Quantitative Control System GA-VVS-AB-SET



V-Valve



Dispensing Valves Controller FB08F

Features

- Compatible with all standard 50ml two-component cartridge packaging.
- Compatible with static mixers with an overall length of 110mm or less.
- Overcomes the dripping issue caused by residual output pressure in two-part pneumatic dispensing guns, minimizing material waste.
- Utilizes a compact, replaceable V-valve paired with a dedicated controller to enable micro-volume fluid control.
- The fluid will not contaminate the valve mechanism, and the V-valve consumables can be replaced quickly and easily.
- Supports any needle specification for further control of the fluid flow rate.
- Can be seamlessly integrated and used with other automation equipment.

Specifications

Model	GA-VVS-AB-SET
Main Dimensions (Excluding Gun)	W200 × L240 × H75 mm
Main Weight (Excluding Gun)	1 kg
Controller Dimensions	W160 × L260 × H70 mm
Controller Weight	1.7 kg
Controller Input Voltage	100~240V AC

Fluid Check Valve FG-80-CC Series



FG-80-CC FG-81-CC FG-82-CC FG-83-CC FG-84-CC FG-85-CC FG-86-CC



Features

- Installed in front of the syringe, connector, or hose; compatible with dispensing needles.
- Prevents dripping via an internal spring mechanism.
- Available in 5 types: Luer Type, 1/8 PT, M6, Φ2, and Φ4 hose barb.
- The standard body material is SUS316.
  Black PTFE material options are available for anaerobic adhesives and UV-curable materials.
- Three spring types are available to suit different application requirements.

Model	FG-80-CC	FG-81-CC	FG-82-CC	FG-83-CC	FG-84-CC	FG-85-CC	FG-86-CC
Type	Luer Type	Luer Type	1/8PT	Φ2 hose barb	Φ4 hose barb	M6	Φ4 hose barb
Material	SUS316	Black PTFE	SUS316	SUS316	SUS316	SUS316	Black PTFE

Specifications and pictures are for reference only. Please contact our sales team for more details.

Dispensing Valves

Diaphragm Valve FG-500D



- Aluminum alloy fluid body.
- Suitable for all kinds of fluid without particles.
- Simple disassembly and easy cleaning.
- The fluid-contact section features an instantaneous oil seal, preventing backflow.
- Small size, light weight, long life, less maintenance.
- The valve body is hardened with aluminum alloy anode inside and outside.
- Size: (D) 25 mm × (H) 116 mm
- Weight: 110 g

Plunger Suck-back Valve FG-800D



- Aluminum alloy fluid body.
- Applicable to all kinds of fluid without particle.
- Small size and light weight.
- Long life, less maintenance.
- Easy disassembly and easy cleaning.
- With suck function, the glue will be sucked back and broken at the same time when it stopped gluing. Ensures clean fluid cutoff with zero dripping, completely eliminating stringing and clogging issues.
- The valve body is hardened with aluminum alloy anode inside and outside.
- Size: (D) 29.5 mm × (H) 121.6 mm
- Weight: 210 g

Double acting Suck-Back Valve FG-532



- Double acting suck back.
- Suitable for various particle-free fluids (high viscosity and large flow).
- Aluminum alloy fluid body.
- Long life, easy maintenance.
- Dimensions: (D) 26 mm × (H) 142 mm
- Weight: 310 g

Needle Valve FG-535



- Single action thimble.
- Suitable for all kinds of particle-free fluid.
- Aluminum alloy fluid body.
- Small size and light weight.
- Long life, easy maintenance.
- Easy disassembly and easy cleaning.
- Size: (D) 25 mm × (H) 120 mm
- Weight: 190 g

Microscale Spray Valve FGS-560DV



- The minimum spraying width can be 2 mm.
- The stainless steel body and shaft are surface-treated,that matched with a anti-corrosion and anti-wear shaft seal, which can be used for most materials.
- Special needle nozzle design, external mixing of air and glue can use lower atomizing air pressure and reduce atomizing air consumption.
- Utilizes a specialized needle nozzle to minimize spray volume while maximizing coating efficiency.Significantly reduces material misting and overspray, preventing unnecessary fluid waste and protecting surrounding areas.
- The nozzle can be easily changed when damaged or jammed.
- Suitable for accelerators, lubricants, UV glues, fluxes (low viscosity), Ink (low viscosity), solvent, epoxy resin (low viscosity).

Size	127 mm × 28.6 mm
Weight	230 g
Nozzle Orifice / Inner Diameter	0.2 mm, 0.15 mm, 0.1 mm inner diameter can be replaced as required
Glue contact material	304 stainless steel shaft, Teflon & Viton shaft seal, passivated 303 stainless steel
Operating frequency	Over 600 cycles / min
Applicable material viscosity	Up to 5,000 cPs

Pressure Tank



1.5Gal Painted Al-Lid Pressure Tank



1L Stainless Steel Pressure Tank



2L Al-Lid Stainless Steel Pressure Tank



Dispensing Pipe



Precision Regulator Opt.

Specifications

Capacity	1.5 Gallon	1 Litre	2 Litre	6 Litre	20 Litre
OD × H (mm)	Ø210 × 260	Ø107 × 145	Ø140 × 260	Ø216 × 252	Ø265 × 472

Features

- Utilizes regulated input air pressure to feed fluid directly from the tank to the dispensing valve. Ideal for scaling up production and eliminating the downtime caused by frequent syringe barrel changes.
- The tank lid layout can be tailored to your process requirements. Standard configuration includes: 1x Air Inlet Regulator, 1x Material Outlet Port, and 1x Safety Pressure Relief Valve.
- Available in a wide range of standard sizes, with fully customized volumetric capacities available upon request.
- The standard air inlet regulator can be upgraded to a High-Precision Regulator or paired with a Digital Pressure Gauge for more meticulous and intuitive pressure adjustments.
- Choose from multiple material combinations to match your fluid's chemical compatibility:
  Painted Steel Body + Aluminum Lid / Stainless Steel Body + Aluminum Lid
  Full Stainless Steel Construction (Body & Lid)
- 【Optional Features】Level Monitoring System: Float-type level indicator with low-level alarm notification.
- 【Optional Features】Thermal Management: Heating and insulation system for the tank body.
- 【Optional Features】Process Visualization & Mixing: Sight glass and agitator (mixer) integration.

Dispensing Cartridge 330ml



Features

- Enables direct dispensing of silicone rubbers.
- Stable feeding, fast and convenient.
- Can also be equipped with a semi-automatic dispenser.
- Dimensions: H260 × Ø55.5 mm (excluding pneumatic fittings)
- Inside Diameter: 50.5 mm
- Weight: 400 g
- Material: Aluminum alloy
- Optional Accessories: Needle Adapter, Silicone Adapter
- There are 6OZ, 8OZ, 12OZ cartridge for selection

Specifications and pictures are for reference only. Please contact our sales team for more details.

Handheld Manual Applicator



Features

- Fits 50 ml dual-component cartridges (ratios: 1:1, 2:1, 4:1, 10:1).
- Simple and effortless to install and remove.
- Ideal for manual, non-volumetric production lines.
- Also available in 30 cc and 55 cc syringe models.

Specifications

Model	Specifications
CAT75	1:1, 2:1 Two-Component
CAT73	4:1 Two-Component
CAT74	10:1 Two-Component
CAT30	30 cc Syringes
CAT55	55 cc Syringes

Pneumatic Dual Cartridge Dispenser

Features

- Fits 50 ml dual-component cartridges (ratios: 1:1, 2:1, 4:1, 10:1).
- Features a pneumatic horizontal plunger for easy, effortless setup.
- Compatible with pressure controllers for automated or manual production.
- Low-maintenance and hassle-free design.

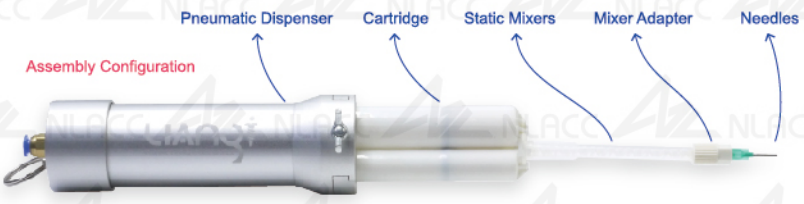

Specifications

Model	Specifications
CAT76	1:1 dual-component cartridges
CAT77	2:1 dual-component cartridges
CAT78-L	10:1 dual-component cartridges
CAT79-C	4:1 dual-component cartridges



Fittings

Syringe Adapter

- Equipped with standard female Luer locks to seamlessly interface dispensing valves with various syringe barrel specifications.
- Material: Plated brass (stainless steel also available).



CIS-CC-M6 CIS-CC-1/8 CIS-CC-1/4 CI-L-CC1/8 CI-L-CC1/4

Straight Syringe Adapter	
Luer Spec.	Model
M6	CIS-CC-M6
1/8 PT	CIS-CC-1/8
1/4 PT	CIS-CC-1/4

L-Type Syringe Adapter	
Luer Spec.	Model
1/8 PT	CI-L-CC1/8
1/4 PT	CI-L-CC1/4

Needle Adapter

- Standard Male Luer Adapter: Connects valves to all types of dispensing needles.
- Material: Plated brass / stainless steel (full stainless steel and plastic variants available).



CIS-T-M5 CIS-T-M6 CIS-T-M8 CIS-T-1/8 CIS-T-1/4 CIS-T-1/4P

Luer Spec.	Model
M5	CIS-T-M5
M6	CIS-T-M6
M8	CIS-T-M8
1/8 PT	CIS-T-1/8
1/4 PT	CIS-T-1/4
1/4 PT Plastic	CIS-T-1/4P

Tubing Adapter

- Standard Luer Adapter: Connects tubing to all types of dispensing needles or syringes.
- Material Options: PP Plastic or Metal.
- Custom specifications available—welcome to inquiry by phone or email.



CI-C-W -2.4x4 CI-EXTEND0102 -2.5x4 CI-LL-D532-02M

Silicone Cartridge Adapter

- High Compatibility: Fits most US and Japanese standard 300ml silicone cartridges on the market.
- Flexible Configuration: Connects directly to needles or converts to universal threads to suit your application.
- Premium POM Material: Resistant to common cleaning solvents (ethanol, acetone). Non-stick surface ensures easy cleaning and reusability.
- Customization Available: We support custom designs and machining for other specifications—low MOQ accepted!



CIS01-06 CIS02-06 CISJ-1/4C CISA-1/4C

Specifications	Model
JP Std.(with Syringe Adapter Included)	CIS01-06
US Std. (with Syringe Adapter Included)	CIS02-06
JP Std. M8	CISJ-M8C
JP Std. 1/4PT	CISJ-1/4C
US Std. M8	CISA-M8C
US Std. 1/4PT	CISA-1/4C
For CEMEDINE Super-X 8008 Only	CISJ-M8C-80

Static Mixer Adapter

- Versatile Adaptation: Designed for connecting static mixers of various diameters to dispensing needles.
- Material Options: Available in PP plastic or metal.
- Engineered to cross-connect static mixing nozzles of varying diameters to standard dispensing tips, ensuring a secure and leak-free transition.



CI-CDB CI-CD-M
【Black Adapter】
Fits static mixers ID ≥ 10mm

CI-CDG CI-CD-M-D3
【Gray Adapter】
Fits static mixers ID 6~8mm

CI-CDW CI-CD-M-NO3
【White Adapter】
Fits static mixers ID ≤ 5mm

Specifications and pictures are for reference only. Please contact our sales team for more details.

Dispensing Accessories
Static Mixers

Features

- Designed for mixing two-part adhesives, these tubes feature precision-engineered elements that ensure thorough, uniform blending to initiate curing.
- They eliminate manual stirring, saving labor and reducing waste while boosting production efficiency and lowering costs.
- A wide range of specifications is available; only our most popular models are featured below. Please contact us by phone or email for inquiries regarding other specifications.



A B C D E F G H I J K L M N

Tip Configurations



Tapered tip



Luer lock tip



Stepped tip

Specifications

Model	Tip Style	Inner Core Type, Color	Mixing Ratio	Interface	Pitch Number	ID (mm)	Length (mm)	Capacity (ml)
A CD63mm	Tapered	Spiral, White	1:1, 2:1	Round Bayonet	17	3	63	0.34
B CD78mm	Tapered	Spiral, Orange	4:1, 10:1	Gray Twist-Lock Base	16	3.2	77	0.6
C CD83mm	Luer lock	Square,Green	-	Square Bayonet	16	5.3	83	1.3
D CD91mmMBQs16GA	Luer lock	Square,Green	1:1, 2:1	Gray Twist-Lock Base	16	5.3	90.7	1.88
E CD110mm	Stepped	Spiral,White	1:1, 2:1	Round Bayonet	17	5.4	104	1.68
F CD115mmMAQs24GA	Luer lock	Square,Green	-	Square Bayonet	24	5.3	115	19
G CD151mmMAsL21WA	Luer lock	Spiral, White	1:1, 2:1	Square Bayonet	21	6.3	151	3.33
H CD153mmMAsT21WA	Stepped	Spiral,White	1:1, 2:1	Square Bayonet	21	6.3	153	3.57
I CD223mmMSs24YA	Stepped	Spiral,Yellow	-	Machine / Bell ID 16.7mm	24	8	223	N/A
J CD225mmMCs24WA	Tapered	Spiral, White	1:1, 2:1	Bell ID 15mm	24	8	225	8.5
K CD235mmMCs32WA	Tapered	Spiral, White	1:1, 2:1	Bell ID 15mm	32	6	234	5
L CD287mmMCs32WA	Stepped	Spiral, White	1:1, 2:1	Bell ID 15mm	32	8	287	10.9
M CD352mmMCs32WA	Tapered	Spiral, White	1:1, 2:1	Bell ID 15mm	32	10	352	17.7
N CD355mmMSs32YA	Stepped	Spiral,Yellow	-	Machine / Bell ID 16.7mm	32	10	355	N/A

Dispensing Accessories
Needles

Tapered Dispensing Tips
NA Series



- All plastic material tapered needle
- Suitable for medium and high viscosity fluids
- 50 sticks per box

Gage	14G	16G	18G	20G	22G	23G	25G	27G
Color	Olive	Gray	Green	Pink	Blue	Orange	Red	Clear
ID(mm)	1.55	1.19	0.84	0.58	0.41	0.33	0.25	0.21
Length(mm)	32	32	32	32	32	32	32	32

※ There are also options for 45° angle and single thread.

Stainless Steel Tips (Standard)
NB series

Special specifications and sizes can be customized



- Plastic material part is P.P
- Dispensing tips is burr-free, and for unobstructed and consistent material flow.
- Stainless steel cannula with a double helix polypropylene hub, not loose when used under high pressure(Also single helix polypropylene hub)
- 50 sticks per box

Gage	14G	15G	18G	20G	21G	22G	23G	25G	27G	30G	32G	34G
Color	Olive	Amber	Green	Pink	Purple	Blue	Orange	Red	Clear	Lavender	Yellow	Cyan
ID(mm)	1.55	1.37	0.84	0.61	0.51	0.41	0.33	0.25	0.20	0.16	0.10	0.06
OD(mm)	1.83	1.65	1.27	0.91	0.81	0.71	0.64	0.51	0.41	0.30	0.25	0.24

P.S Other specifications available

※ Length: 1/4′, 1′, 1.5′, 2′.

※ 45°, 90°, flexibility (softness), teflon needle, etc.

※ The locking method has double helix polypropylene hub and single helix polypropylene hub.

All Metal Stainless Steel Tips
NG series

Special specifications and sizes can be customized



- The whole stainless steel needle is polished without burrs
- 12 pcs per box

Gage	8G	10G	11G	12G	13G	14G	15G	16G	17G	18G	19G	20G	21G	22G	23G	24G	25G	26G	27G	28G	30G	32G
ID(mm)	3.60	3.00	2.60	2.40	2.00	1.60	1.40	1.20	1.04	0.84	0.70	0.60	0.51	0.41	0.33	0.30	0.25	0.24	0.20	0.19	0.15	0.10
OD(mm)	4.00	3.40	3.00	2.80	2.40	2.00	1.80	1.63	1.50	1.27	1.05	0.91	0.82	0.70	0.63	0.56	0.52	0.45	0.41	0.39	0.31	0.25

P.S Other specifications available choice

※ Length, angle, and needle slope can be customized

※ Another 45° , 90°

※ Multi point dispensing needle limited to 17G to 28G

Specifications and pictures are for reference only. Please contact our sales team for more details.

Dispensing Accessories
Needles

Brush Tips
NF series

Special specifications and sizes can be customized

- The brush is made of nylon, with good toughness, constant bristles, no lint. There are soft (white) and hard (brown) bristles for available.
- The width of the brush is 3mm, 5mm, 8mm for choosing, and it is divided into two specifications of round head and flat head.
- It is suitable for brushing glue liquid on a large area surface, which can improve production efficiency.



Gage	14G	15G	18G	20G	21G	22G	23G	25G
Color	Olive	Amber	Green	Pink	Purple	Blue	Orange	Red
ID(mm)	1.55	1.37	0.84	0.61	0.51	0.41	0.33	0.25

PP Flexible Needle
ND series

- PP flexible needles prevent scratching the workpiece surface.
- 50 sticks per box



Gage	14G	15G	18G	20G	22G	25G	27G
Color	Olive	Amber	Green	Pink	Blue	Red	Orange
ID(mm)	1.4	1.35	0.8	0.62	0.41	0.25	0.16

PTFE Flexible Needle
NH series

- Prevents instant glue clogging inside the needle and delivers superior flow control for low-viscosity fluids.
- Keeps materials scratch-free while allowing access to harder-to-reach or curved areas.

Gage	14G	16G	18G	20G	22G	23G	25G
Color	Olive	Gray	Green	Pink	Blue	Orange	Red
ID(mm)	1.6	1.2	0.8	0.6	0.4	0.35	0.26

PTFE-lined Tips
NH series

- Prevents instant glue clogging inside the needle and delivers superior flow control for low-viscosity fluids.
- Available in 0.5-inch and 1-inch lengths.
- 50 sticks per box

Gage	22G	25G	30G
Color	Gray	Pink	Red
ID(mm)	0.51	0.3	0.2



Stainless Steel Chamfered Tips
NBS series

- Ideal for micro-dot dispensing or low-viscosity fluids.
- Refer to NB series Dispensing Steel Needle Specs.



Dispensing Accessories
Syringes



Syringes

- 100% silicone-free to prevent contamination.
- Precision-molded PP barrels with ultra-thick walls to prevent cracking; compatible with various fluids.
- Specially designed zero-taper, vertical walls provide precise dispensing and eliminate fluid waste.
- Rounded interior corners ensure smooth and consistent fluid flow.
- Syringe barrels are available in various sizes, colors, and materials to accommodate different fluid properties.
- Available in US and Japanese styles, with multiple options including clear, amber, and black.
- Sizes available: 5cc, 10cc, 30cc, and 50/55cc.



Syringe Adaptor

- One-piece, integrated Luer Lock adapter assembly ensures a completely secure, airtight connection with the syringe.
- Available in US Std., Japanese Std., or metal configurations.



Syringe Set

- Molded from silicone-free polypropylene (PP).
- Precision-molded PP barrels with ultra-thick walls to prevent cracking.
- Specially designed zero-taper, vertical walls provide precise dispensing and eliminate fluid waste.
- Rounded interior corners ensure smooth and consistent fluid flow.
- Available in clear, UV-blocking amber, and opaque black.
- 4-piece kit includes a syringe barrel, piston, tip cap, and adapter assembly (available in plastic or metal).
- Sizes available: 100cc, 200cc, 300cc, and 500cc.



Piston

- Made of inert PE material, featuring a low-friction, double-wiper design to completely wipe barrel walls clean.



End Cap

- Available in straight-press and snap-on designs. The unique snap-on mechanism prevents fluid side-leakage during transit.
- Offered in multiple options, including US and Japanese standards.



Tip Cap

- Secure tip caps provide a universal fit for all syringe barrel specifications.
- Available in US Std., Japanese Std., or centrifugal defoaming configurations.

Specifications and pictures are for reference only. Please contact our sales team for more details.

Dispensing Accessories
Teflon Tube (PTFE / PFA / FEP)

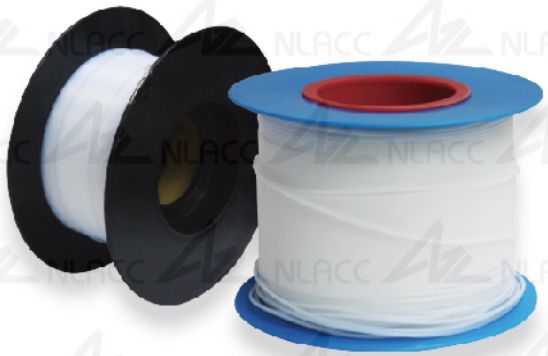

Features

- Excellent temperature resistance (Operating temperature: -70°C to 260°C)
- Superior non-stick property; prevents any residue buildup on tube walls
- Excellent electrical insulation with a dielectric constant of approx. 2.1
- Highly resistant to corrosion, chemicals, oil, acids, and alkalis
- Low water absorption
- Non-flammable
- Non-toxic and safe
- Excellent weather resistance

Gage	ID(mm)	OD(mm)		Packaging
AWG	Normal	T-TYPE	L-TYPE	(Meter/Roll)
30	0.30	0.76	0.60	305
28	0.38	0.84	0.68	305
26	0.46	0.92	0.76	305
24	0.56	1.06	0.86	305
23	0.66	1.16	0.96	305
22	0.71	1.21	1.01	305
21	0.81	1.31	1.11	305
20	0.86	1.46	1.16	305
19	0.96	1.56	1.26	305
18	1.07	1.67	1.37	305
17	1.19	1.79	1.49	305
16	1.34	1.94	1.64	305
15	1.50	2.10	1.80	305
14	1.68	2.28	2.08	153
13	1.93	2.53	2.33	153
12	2.16	2.77	2.56	153
11	2.41	3.01	2.81	153
10	2.69	3.29	3.09	153
9	3.00	3.76	3.40	100
8	3.38	4.14	3.78	100
7	3.76	4.52	4.16	100
6	4.22	4.98	4.72	100

※ Custom lengths available; sold/cut by the meter.

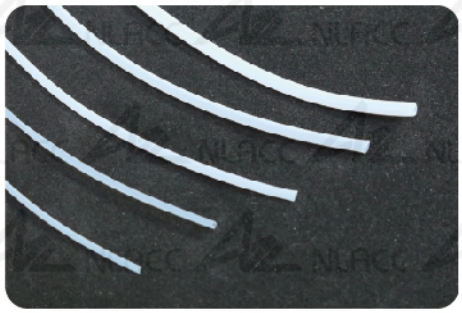

SERVICES

Dispensing Robot · Visual Dispenser ·
UV Equipment · Hot Melt Applicator ·
Two Component Dispenser · Pressure Cylinder · Valve ·
Dispensing Accessories · UV Equipment · Centrifuges ·
Electrostatic Sensing Equipment / ESD Consumables
Dispensing Controller · Automated Machinery Planning ·
Adhesive Repackaging / Contract Dispensing

UV Adhesives · Threadlockers · Retaining Compounds ·
Thread Sealants · Potting Adhesives ·
Gasket Sealants · Instant Adhesives ·
Epoxy Adhesives · Silicone · PUR Adhesives ·
Electrically / Thermally conductive adhesive ·
High / Low Temperature Solder Paste ·
Metal Repair · Wear Resistant Coatings ·
Anti-Seize Compounds · Floor Coatings ·
Surface Treatments · Industrial Cleaners · Repair Material ·
Waterproof Coatings & Waterproofing Engineering ·
Nail & Eyelash Adhesives

NLACC

全國材料有限公司
National Electronic & Industrial Material Co., Ltd

5 F., No. 168, Chongxue Rd., East Dist.,
Tainan City 701016, Taiwan (R.O.C.)
Tel: +886-6-2602255 Fax: +886-6-2601311
Mail: nlacc.sales@lym.com.tw
Tax ID Number: 64914425

LIANYI
electronic & industrial material Co., Ltd.

聯億材料有限公司
LIAN-YI Electronic & Industrial Material Co., Ltd

5 F., No. 166, Chongxue Rd., East Dist.,
Tainan City 701016, Taiwan (R.O.C.)
Tel: +886-6-2881813 Fax: +886-6-2601311
Mail: lianyi.sales@lym.com.tw
Tax ID Number: 24213572

Web www.lym.com.tw LINE@「@lianyi.tw」 facebook「lianyi.lym」